Specification sheet

Diesel generator set 4B3.9 series engine

42 kVA - 70 kVA 50 Hz

42 kWe - 92 kWe 60 Hz

Description

This Cummins® commercial generator set is a fully integrated power generation system, providing optimum performance, reliability and versatility for stationary Standby and Prime Power applications.

Features

Cummins heavy-duty engine - Rugged 4-cycle industrial diesel delivers reliable power, low emissions and fast response to load changes.

Optional Permanent Magnet Generator (PMG) - Offers enhanced motor starting and fault clearing short circuit capability.

Alternator - Several alternator sizes offer selectable motor starting capability with low reactance 2/3 pitch windings, low waveform distortion with non-linear loads and fault clearing short-circuit capability.

Cooling system - Standard integral set-mounted radiator system, designed and tested for rated ambient temperatures, simplifies facility design requirements for rejected heat.

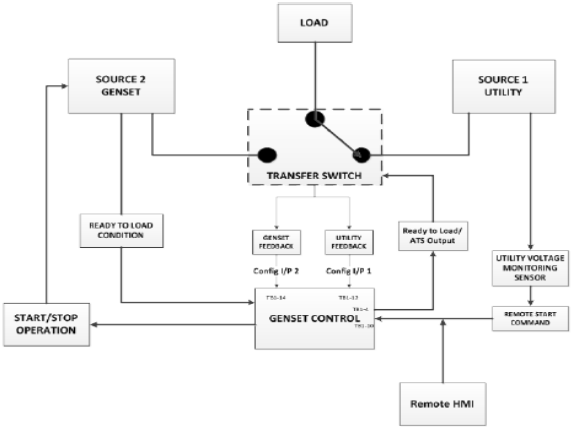

Control system - The PowerCommand® electronic control is standard equipment and provides total system integration, including auto remote start/stop, alarm and status message display.

NFPA - The genset accepts full rated load in a single step in accordance with NFPA 110 for Level 1 systems.

Warranty - Backed by a comprehensive warranty and worldwide distributor network.

Genset model	Engine model	Standby 50 Hz kVA (kWe)	Standby 60 Hz kWe (kVA)	Prime 50 Hz kVA (kWe)	Prime 60 Hz kWe (kVA)	Emissions TA Luft/ EU Stage/EPA	Data sheets 50 Hz	Data sheets 60 Hz
C45D5	4B3.9-G2	42 (34)		38 (31)		TIER 1	D-6320	
C70D5	4BT3.9-G4	70 (56)		64 (51)		TIER 1	D-6322	
C40D6	4B3.9-G2		42 (53)		38 (48)	TIER 1		D-6321
C65D6	4BT3.9-G4		65 (81)		59 (74)	TIER 1		D-6323
C90D6	4BTA3.9-G4		92 (115)		83 (104)			D-6325

©2019 Cummins Inc. | S-6318-EN

Generator set specifications

Voltage regulation, no load to full load	± 0.5%
Random voltage variation	± 0.5%
Frequency regulation	Isochronous
Random frequency variation	± 0.25%

Engine specifications

Design	4 cycle, in-line
Bore	102 mm (4.02 in.)
Stroke	120 mm (4.72 in.)
Displacement	3.92 liter (239 in^3)
Cylinder block	4 cylinders
Battery capacity	76 AH
Battery charging alternator	95 amps
Starting voltage	12 volts, negative ground
Fuel system	Direct injection
Fuel filter	Stratapore Media Filter with water separator
Air cleaner type	OptiAir™ technology
Lube oil filter type(s)	Spin-on, full flow combination and bypass
Standard cooling system	Cooling system for high ambient temperature

Alternator specifications

Design	Brushless, revolving field
Stator	2/3 pitch
Rotor	Single bearing, flexible disc
Insulation system	Class H
Level of protection	IP23
Exciter type	Self-excited or separately excited by PMG
Phase rotation	A (U), B (V), C (W)
Alternator cooling	Direct drive centrifugal blower fan
AC waveform Total Harmonic Distortion (THDV)	No load <1.5%. Non-distorting balanced linear load <5%
Telephone Influence Factor (TIF)	< 50 per NEMA MG1-22.43
Telephone Harmonic Factor (THF)	<2%

Available voltages

50 Hz Line-Neutral/Line-Line	60 Hz Line-Neutral/Line-Line
• 255/440 • 230/400 • 220/380 • 127/220	• 277/480 • 255/440 • 220/380 • 127/220

Note: Consult factory for other voltages.

©2019 Cummins Power Generation Inc. | S-6318-EN

Generator set options and accessories[1]

Engine
- 220 ~ 240V thermo-statically controlled coolant heater
- Heavy duty air cleaner

Alternator
- 105 °C rise[2]
- 125 °C rise[2]
- 150 °C rise[2]
- Anti-condensation heater

Control panel
- PowerCommand 1.1
- PowerCommand 3.3
- PowerStart 0500

Switch Gear
- ATS Outside of generator (Gtec)
- ATS integrated into generator set

Exhaust system
- Residential grade exhaust silencer (9 dB)
- Critical grade exhaust silencer (29 dB)

Generator set
- Battery
- Battery charger
- Circuit breaker
- In-skid AVM
- Manual / Labels language – English, Portuguese and Spanish

Sound Attenuation
- Enclosure for 85dB
- Inlet / outlet room attenuator for:
    - 65dB
    - 75dB
    - 85dB
- Acoustic door

Remote Monitoring System
- PC500/550 remote monitoring system

Notes:
[1] Some options may not be available on all models - consult factory for availability.
[2] Consult the factory to see available temperature raise for each genset model.

©2019 Cummins Power Generation Inc. | S-6318-EN

PowerCommand 3.3 control system

The PowerCommand control system is an integrated microprocessor based generator set control system providing voltage regulation, engine protection, alternator protection, operator interface and isochronous governing. Refer to document S-1567 and S-1570 for more detailed information on the control

Masterless Load Demand (MLD) - The controller is capable of smartly managing power from paralleled generators to match varying load patterns.

Power management - Control function provides battery monitoring and testing features and smart starting control system.

Advanced control methodology - Three phase sensing, full wave rectified voltage regulation, with a PWM output for stable operation with all load types.

Regulation compliant - Prototype tested: UL, CSA and CE compliant.

Service - InPower™ PC-based service tool available for detailed diagnostics, setup, data logging and fault simulation.

Easily upgradeable - PowerCommand controls are designed with common control interfaces.

Reliable design - The control system is designed for reliable operation in harsh environment.

Operator panel features

Operator/display functions

- Displays paralleling breaker status
- Provides direct control of the paralleling breaker
- 320 x 240 pixels graphic LED backlight LCD
- Auto, manual, start, stop, fault reset and lamp test/panel lamp switches
- Alpha-numeric display with pushbuttons
- Heated HMI
- LED lamps indicating genset running, remote start, not in auto, common shutdown, common warning, manual run mode, auto mode and stop

Paralleling control functions

- First Start Sensor™ system selects first genset to close to bus
- Phase lock loop synchronizer with voltage matching
- Sync check relay
- Isochronous kW and kVar load sharing
- Enhanced safety features for paralleling generators

Alternator data

- Line-to-Neutral and Line-to-Line AC volts
- 3-phase AC current
- Frequency

  kW, kVar, power factor kVA (three phase and total)

Engine data

- DC voltage
- Lube oil pressure
- Coolant temperature
- Comprehensive FAE data (where applicable)

Other data

- Fault history
- Data logging and fault simulation (requires InPower)

Standard control functions

Digital governing

- Integrated digital electronic isochronous governor
- Temperature dynamic governing

Digital voltage regulation

- Integrated digital electronic voltage regulator
- 3-phase, 4-wire Line-to-Line sensing
- Configurable torque matching

AmpSentry™ AC protection

- AmpSentry protective relay
- Over current and short circuit shutdown
- Over current warning
- Single and three phase fault regulation
- Over and under voltage shutdown
- Over and under frequency shutdown
- Overload warning with alarm contact
- Reverse power and reverse Var shutdown
- Field overload shutdown

Engine protection

- Battery voltage monitoring, protection and testing
- Overspeed shutdown
- Low oil pressure warning and shutdown
- High coolant temperature warning and shutdown
- Low coolant level warning or shutdown
- Low coolant temperature warning
- Fail to start (overcrank) shutdown
- Fail to crank shutdown
- Cranking lockout
- Sensor failure indication
- Full authority electronic engine protection

Control functions

- Time delay start and cool down
- Real time clock for fault and event time stamping
- Cycle cranking
- Load shed
- Remote emergency stop

©2019 Cummins Power Generation Inc. | S-6318-EN

Ratings definitions

Emergency Standby Power (ESP):

Applicable for supplying power to varying electrical load for the duration of power interruption of a reliable utility source. Emergency Standby Power (ESP) is in accordance with ISO 8528. Fuel Stop power in accordance with ISO 3046, AS 2789, DIN 6271 and BS 5514

Limited-Time Running Power (LTP):

Applicable for supplying power to a constant electrical load for limited hours. Limited Time Running Power (LTP) is in accordance with ISO 8528.

Prime Power (PRP):

Applicable for supplying power to varying electrical load for unlimited hours. Prime Power (PRP) is in accordance with ISO 8528. Ten percent overload capability is available in accordance with ISO 3046, AS 2789, DIN 6271 and BS 5514.

Base Load (Continuous) Power (COP):

Applicable for supplying power continuously to a constant electrical load for unlimited hours. Continuous Power (COP) in accordance with ISO 8528, ISO 3046, AS 2789, DIN 6271 and BS 5514.

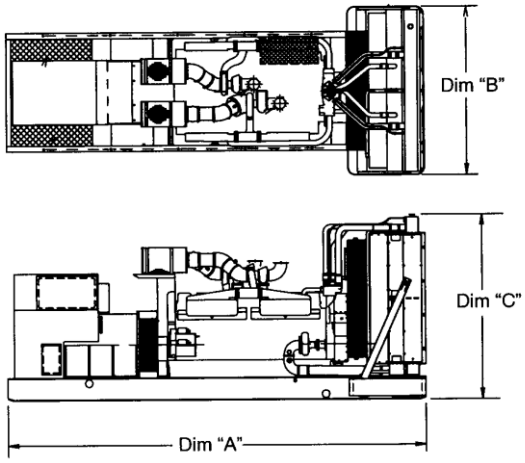

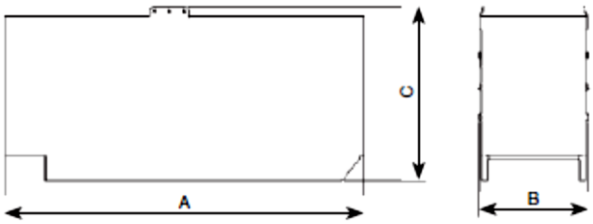

Those outlines drawings are to provide representative configuration details for model series only. See respective model data sheet for specific model outline drawing number.

Do not use for installation design.

Open Set model	Dim "A" mm	Dim "B" mm	Dim "C" mm	Set weight dry* kg	Set weight wet* kg
C45D5	1920	1050	1513	860	891
C70D5	1920	1050	1513	901	932
C40D6	1920	1050	1513	860	891
C65D6	1920	1050	1513	901	932
C90D6	1920	1050	1513	1023	1058

*Note: Weights represent a set with standard features. See outline drawings for weights of other configurations.

Enclosure model	Dim "A" mm	Dim "B" mm	Dim "C" mm	Set weight dry* kg	Set weight wet* kg
C45D5	2589	1116	1642	1126	1257
C70D5	2589	1116	1642	1266	1296
C40D6	2589	1116	1642	1226	1257
C65D6	2589	1116	1642	1266	1296
C90D6	2589	1116	1642	1385	1421

*Note: Weights represent a set with standard features. See outline drawings for weights of other configurations.

©2019 Cummins Power Generation Inc. | S-6318-EN

Codes and standards

Codes or standards compliance may not be available with all model configurations – consult factory for availability.

ISO 9001 ISO 14001 BUREAU VERITAS Certification	This product designed and manufactured in facilities certified to ISO 9001 and ISO 14001	**ISO 8528**	Reciprocating internal combustion engine driven generating sets
		NR12	Safety at Work in Machinery and Equipment
TÜVRheinland RETIE CERTIFIED	Colombia's Certification	**ISO 3046**	Reciprocating Internal Combustion Engines
SEC SUPERINTENDENCIA DE ELECTRICIDAD Y COMBUSTIBLES	Chile's Certification	**IEC 60034**	Rotating electrical machines

Warning: Back feed to a utility system can cause electrocution and/ or property damage. Do not connect to any building's electrical system except through an approved device or after building main switch is open.

For more information contact your local Cummins distributor or visit power.cummins.com

Our energy working for you.™

©2019 Cummins Inc. All rights reserved. Cummins is a registered trademark of Cummins Inc. PowerCommand, AmpSentry, InPower and "Our energy working for you." are trademarks of Cummins Inc. Other company, product, or service names may be trademarks or service marks of others. Specifications are subject to change without notice.